Part Number	**DAO-6F002E**		Revision	
Customer P/N			Revision	
Capacitance	**2.5**	uF.	Tolerance	**5.0%**
Voltage	**660**	VAC		
Dielectric	**Metallized Polypropylene**			
Terminal Type	**.250" Quad-Spade Quick Connect Terminals**			
Operating Temperature	**-25** °C.-	**85** °C.		
Dissipation Factor	**0.001**	maximum	@ 60 Hz.	

MOTOR Capacitors, Inc.

Motor Capacitors, Inc.
335 Beinoris Drive
Wood Dale, Illinois 60191
773-774-6666 (Phone) | 773-774-6690 (Fax)
www.capacitorindustries.com
info@capacitorindustries.com

	Dimension	Tolerance
Case / Cover Width (W)	**2.17**	**0.06**
Case / Cover Thickness (T)	**1.38**	**0.06**
Case Height (H)	**2.56**	**0.06**
Terminal Height (K)	**0.56**	**ref.**
Terminal-Terminal (M)	**0.81**	**ref.**
Insulating Cup (dia.)	**0.74**	**ref.**

Dimensions in inches

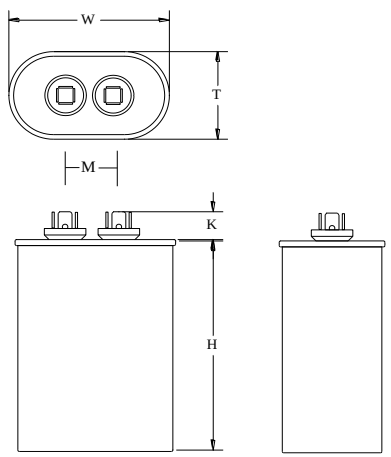

Stamping

2.5 uF. 5% 660V 50/60 Hz. SH Capacitor
Motor Capacitors

Non PCB Protected 10,000 AFC
DAO-6F002E

Approval: *J.D. Aldana*

Date **September 29, 2000**