Part Number	**CBB66A-550V346**		Revision	**A**
Customer P/N			Revision	**A**
Capacitance	**34**	uF.	Tolerance	**3.0%**
Voltage	**550**	VAC		
Dielectric	**Metallized Polypropylene**			
Terminal Type	**.250" Quad-Spade Quick Connect Terminals**			
Operating Temperature	**-25** °C.-	**100** °C.		
Dissipation Factor	**0.002**	maximum @ 60 Hz.		

MOTOR Capacitors, Inc.

Motor Capacitors, Inc.
335 Beinoris Drive
Wood Dale, Illinois 60191
773-774-6666 (Phone) | 773-774-6690 (Fax)
www.capacitorindustries.com
info@capacitorindustries.com

	Dimension	Tolerance
Case / Cover Width (W)	**3.54**	**0.04**
Case / Cover Thickness (T)	**1.89**	**0.04**
Case Height (H)	**3.86**	**0.12**
Terminal Height (K)	**0.56**	**ref.**
Terminal-Terminal (M)	**0.79**	**ref.**
Insulating Cup (dia.)	**0.70**	

Dimensions in inches

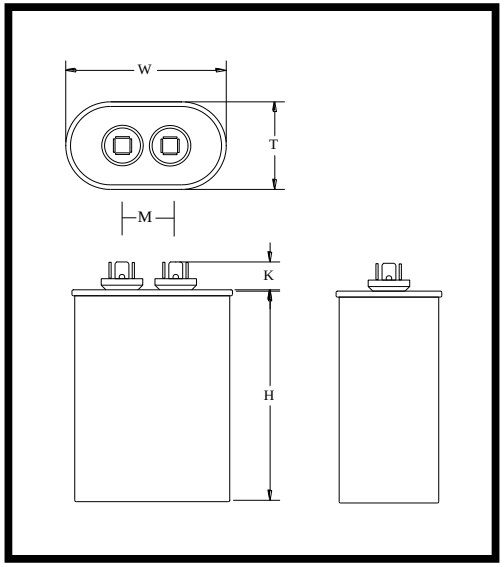

Stamping

AHJK - Motor Cap
CBB66A-550V346
34 uF +/-3% 550VAC
100º C Max. 50/60Hz.
Protected 10,000 AFC
Internal Resistor
Non PCB ЯU cЯU Date Code RoHS

Oil-Filled, Aluminum Can Lighting Capacitor
Internal Resistor 1 watt, 560k
UL810 UL-cUL Approval (540 VAC); Rated 60,000 Hrs
Rated Current (550 VAC @ 50 Hz) = 6.05 A

Approval: *J.D. Aldana*
Date **December 22, 2022**