Part Number	**CBB66A-480V156**		Revision	
Customer P/N			Revision	
Capacitance	**15**	uF.	Tolerance	**5.0%**
Voltage	**480**	VAC		
Dielectric	**Metallized Polypropylene**			
Terminal Type	**.250" Quad-Spade Quick Connect Terminals**			
Operating Temperature	**-25** °C.-	**100** °C.		
Dissipation Factor	**0.0001**	maximum @ 60 Hz.		

MOTOR Capacitors, Inc.

Motor Capacitors, Inc.
335 Beinoris Drive
Wood Dale, Illinois 60191
773-774-6666 (Phone) | 773-774-6690 (Fax)
www.capacitorindustries.com
info@capacitorindustries.com

	Dimension	Tolerance
Case / Cover Width (W)	**2.79/2.86**	**0.06**
Case / Cover Thickness (T)	**1.77/1.89**	**0.06**
Case Height (H)	**3.90**	**0.06**
Terminal Height (K)	**0.56**	**ref.**
Terminal-Terminal (M)	**0.83**	**ref.**
Insulating Cup (dia.)	**0.74**	

Dimensions in inches

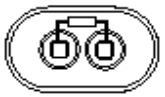

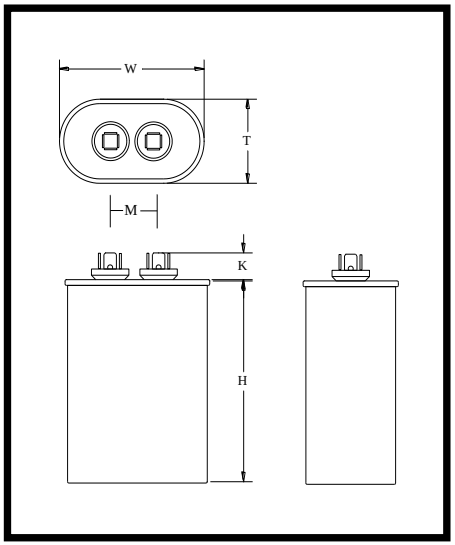

Stamping

AHJK - Motor Cap
CBB66A-480V156
15 uF 5% 480VAC
100 C Max. 50/60Hz.
Protected 10,000 AFC
ЯU
Non PCB Date Code RoHs

c US

Metal Halide Lighting Capacitor

Approval: *J.D. Aldana*
Date **May 14, 2010**