Part Number	**CBB65-660V305-M1**		Revision	
Customer P/N	**21230751100002**		Revision	
Capacitance	**3**	uF.	Tolerance	**3.0%**
Voltage	**660**	VAC		
Dielectric	**Metallized Polypropylene**			
Terminal Type	**Two-Spade Quick Connect Terminals**			
Operating Temperature	**-40** °C.-	**85** ºC.		
Dissipation Factor	**0.001**	maximum @ 60 Hz.		

MOTOR Capacitors, Inc.

Motor Capacitors, Inc.
335 Beinoris Drive
Wood Dale, Illinois 60191
773-774-6666 (Phone) | 773-774-6690 (Fax)
www.capacitorindustries.com
info@capacitorindustries.com

	Dimension	Tolerance
Case / Cover Width (W)	**2.03/2.16**	**0.03**
Case / Cover Thickness (T)	**1.23/1.31**	**0.03**
Case Height (H)	**3.12**	**0.06**
Terminal Height (K)	**0.56**	**ref.**
Terminal-Terminal (M)	**0.81**	**ref.**
Insulating Cup (dia.)	**0.74**	
Dimensions in inches		

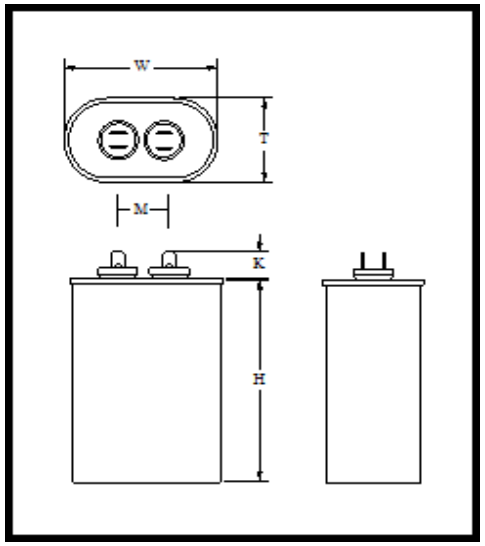

Stamping

Wuxi - Motor Cap
CBB65-660V305-M1
3 uF 3% 660 VAC
-40 - +85 C. 50/60 Hz.
21230751100002
Protected 10,000 AFC
Non PCB Date Code RoHs

Tolerance Dot Marking Required on Cover
White -3%~0% Yellow 0%~+3%

Approval: *J.D Aldana*
Date **August 15, 2005**