| | | | | |
|---|---|---|---|---|
| Part Number | **CBB65-440V405-M3** | | Revision | E |
| Customer P/N | **K01666-0030** | | Revision | **E** |
| Capacitance | **4** | uF. | Tolerance | **5.0%** |
| Voltage | **440** | VAC | | |
| Dielectric | **Metallized Polypropylene** | | | |
| Terminal Type | **Dual .250" X .03" Quick Connect Terminals** | | | |
| Operating Temperature | **-40** °C.- | **85** ºC. | | |
| Dissipation Factor | **0.0015** | maximum @ 60 Hz. | | |

MOTOR Capacitors, Inc.


**Motor Capacitors, Inc.**
**335 Beinoris Drive**
**Wood Dale, Illinois 60191**
**773-774-6666 (Phone) | 773-774-6690 (Fax)**
www.capacitorindustries.com
info@capacitorindustries.com


| | Dimension | Tolerance |
|---|---|---|
| Case / Cover Width (W) | **2.03/2.16** | **0.03** |
| Case / Cover Thickness (T) | **1.23/1.31** | **0.03** |
| Case Height (H) | **1.60** | **0.06** |
| Terminal Height (K) | **0.56** | **ref.** |
| Terminal-Terminal (M) | **0.81** | **ref.** |
| Insulating Cup (dia.) | **0.74** | |
| *Dimensions in inches* | | |

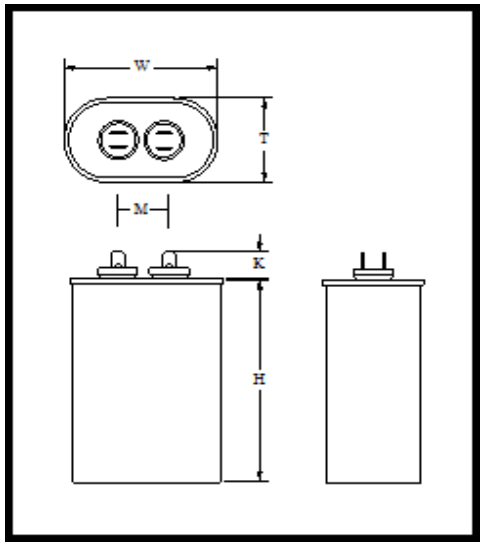


Stamping

**Motor Capacitors**
**CBB65-440V405-M3**
**4uF 5% 440 VAC**
**-40 - +85 C. 50/60 Hz.**
**K01666-0030**
**Protected 10,000 AFC**
**Non PCB ЯU cЯU Date Code RoHS**

**Cover Dimensions; 2.16" X 1.31" +/-0.03". Insulating Cups; 0.74" diameter.**

Approval: *J.D Aldana*
Date **November 28, 2005**