Part Number	**CBB65-440V106-M2**		Revision	
Customer P/N			Revision	
Capacitance	**10**	uF.	Tolerance	**5.0%**
Voltage	**440**	VAC		
Dielectric	**Metallized Polypropylene**			
Terminal Type	**Dual .250" X .03" Quick Connect Terminals**			
Operating Temperature	**-25** °C.-	**85** °C.		
Dissipation Factor	**0.001**	maximum	@ 60 Hz.	

MOTOR Capacitors, Inc.

Motor Capacitors, Inc.
335 Beinoris Drive
Wood Dale, Illinois 60191
773-774-6666 (Phone) | 773-774-6690 (Fax)
www.capacitorindustries.com
info@capacitorindustries.com

	Dimension	Tolerance
Case / Cover Width (W)	**2.03/2.16**	**0.06**
Case / Cover Thickness (T)	**1.23/1.31**	**0.06**
Case Height (H)	**3.41**	**max.**
Terminal Height (K)	**0.56**	**ref.**
Terminal-Terminal (M)	**0.81**	**ref.**
Insulating Cup (dia.)	**0.74**	

Dimensions in inches

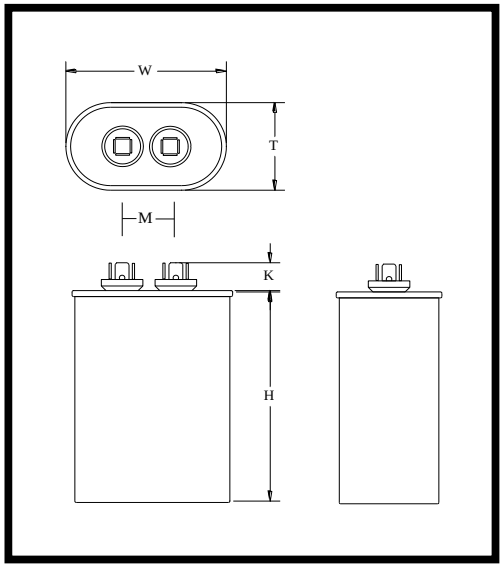

Stamping

Wuxi - Motor Cap
CBB65-440V106-M2
10uF 5% 440 VAC
-25 - +85 C. 50/60 Hz.

Protected 10,000 AFC

Non PCB **ЯU** **cЯU** **Date Code** **RoHS**

Approval: *J.D. Aldana*
Date **May 30, 2017**