Part Number	**CBB65-370V305-A1**		Revision	**B**
Customer P/N	**301132725**		Revision	**B**
Capacitance	**3**	uF.	Tolerance	**5.0%**
Voltage	**370**	VAC		
Dielectric	**Metallized Polypropylene**			
Terminal Type	**.250" Quad-Spade Quick Connect Terminals**			
Operating Temperature	**-40** °C.-	**70** °C.		
Dissipation Factor	**0.001**	maximum	@ 60 Hz.	

MOTOR Capacitors, Inc.

Motor Capacitors, Inc.
335 Beinoris Drive
Wood Dale, Illinois 60191
773-774-6666 (Phone) | 773-774-6690 (Fax)
www.capacitorindustries.com
info@capacitorindustries.com

	Dimension	Tolerance
Case / Cover Width (W)	**2.03**	**0.03**
Case / Cover Thickness (T)	**1.24**	**0.03**
Case Height (H)	**1.57**	**max.**
Terminal Height (K)	**0.56**	**ref.**
Terminal-Terminal (M)	**0.81**	**ref.**
Insulating Cup (dia.)	**0.74**	

Dimensions in inches

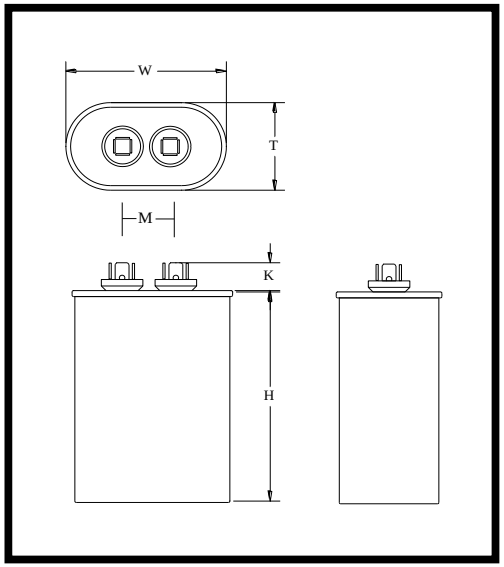

Stamping

Anhui - Motor Cap
CBB65-370V305-A1
3uF 5% 370 VAC
-40- +70 C. 50/60 Hz.
301132725
Protected 10,000 AFC
Non PCB **ЯU** **Date Code** **RoHS**

Approval: *J.D. Aldana*
Date **November 4, 2014**