Part Number	**CBB65-370V206-M4**		Revision	**43**
Customer P/N	**6100-9053**		Revision	**43**
Capacitance	**20**	uF.	Tolerance	**10.0%**
Voltage	**370**	VAC		
Dielectric	**Metallized Polypropylene**			
Terminal Type	**.250" Quad-Spade Quick Connect Terminals**			
Operating Temperature	**-25** °C.-	**85** °C.		
Dissipation Factor	**0.001**	maximum	@ 60 Hz.	

MOTOR Capacitors, Inc.

Motor Capacitors, Inc.
335 Beinoris Drive
Wood Dale, Illinois 60191
773-774-6666 (Phone) | 773-774-6690 (Fax)
www.capacitorindustries.com
info@capacitorindustries.com

	Dimension	Tolerance
Case / Cover Width (W)	**2.91**	**0.03**
Case / Cover Thickness (T)	**1.91**	**0.03**
Case Height (H)	**2.59**	**0.06**
Terminal Height (K)	**0.56**	**ref.**
Terminal-Terminal (M)	**0.81**	**ref.**
Insulating Cup (dia.)	**0.74**	

Dimensions in inches

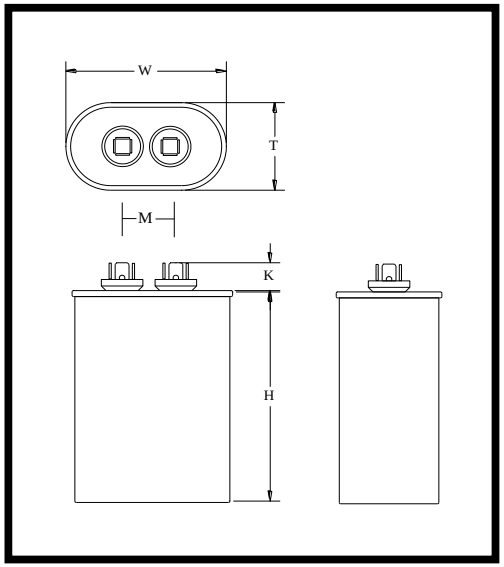

Stamping

Wuxi - Motor Cap
CBB65-370V206-M4
20uF 10% 370 VAC
-25 - +85 C. 50/60 Hz.
6100-9053
Protected 10,000 AFC
Non PCB ЯU cЯU Date Code RoHS

Cover Dimensions; 2.91" X 1.91" +/-0.03". Insulating Cups; 0.74" diameter.

Approval: *J.D. Aldana*
Date **June 5, 2005**