Part Number	**CBB65-370V206-M1**		Revision	**3**
Customer P/N	**6100-6049**		Revision	**3**
Capacitance	**20**	uF.	Tolerance	**10.0%**
Voltage	**370**	VAC		
Dielectric	**Metallized Polypropylene**			
Terminal Type	**.250" Quad-Spade Quick Connect Terminals**			
Operating Temperature	**-40** °C.-	**85** °C.		
Dissipation Factor	**0.001**	maximum	@ 60 Hz.	

MOTOR Capacitors, Inc.

Motor Capacitors, Inc.
335 Beinoris Drive
Wood Dale, Illinois 60191
773-774-6666 (Phone) | 773-774-6690 (Fax)
www.capacitorindustries.com
info@capacitorindustries.com

	Dimension	Tolerance
Case / Cover Width (W)	**2.03/2.16**	**0.03**
Case / Cover Thickness (T)	**1.23/1.31**	**0.03**
Case Height (H)	**4.75**	**max.**
Terminal Height (K)	**0.56**	**ref.**
Terminal-Terminal (M)	**0.81**	**ref.**
Insulating Cup (dia.)	**0.74**	

Dimensions in inches

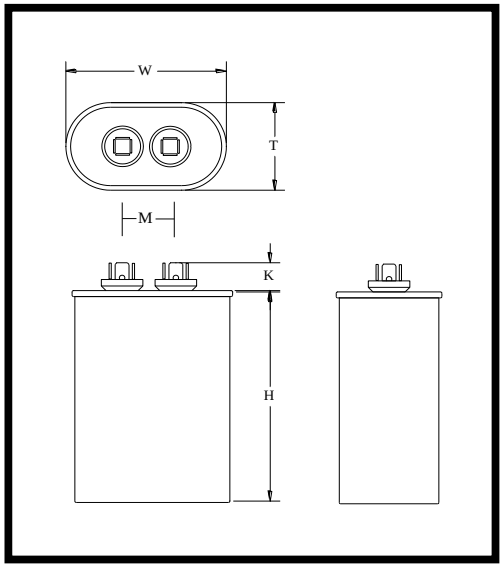

Stamping

Wuxi - Motor Cap
CBB65-370V206-M1
20uF 10% 370 VAC
-40 - +85 C. 50/60 Hz.
6100-6049
Protected 10,000 AFC
Non PCB ЯU cЯU Date Code RoHS

Cover Dimensions; 2.16" X 1.31" +/-0.03". Insulating Cups; 0.74" diameter.
Preferred Height is: 3.76"

Approval: *J.D. Aldana*
Date **May 22, 2005**