SEI Part Number 2936

Capacitance: 100 uF. +/-10% Rated Voltage: 800 VDC Test Voltage: 1200 VDC Dielectric: Metallized Polypropylene

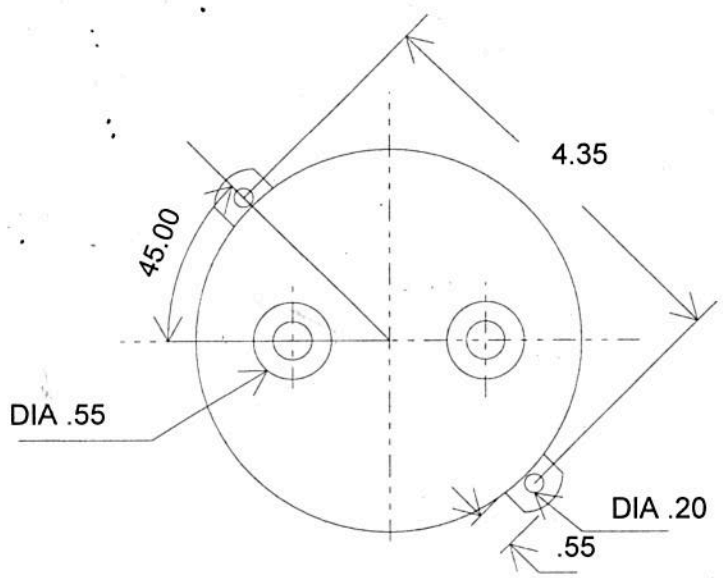

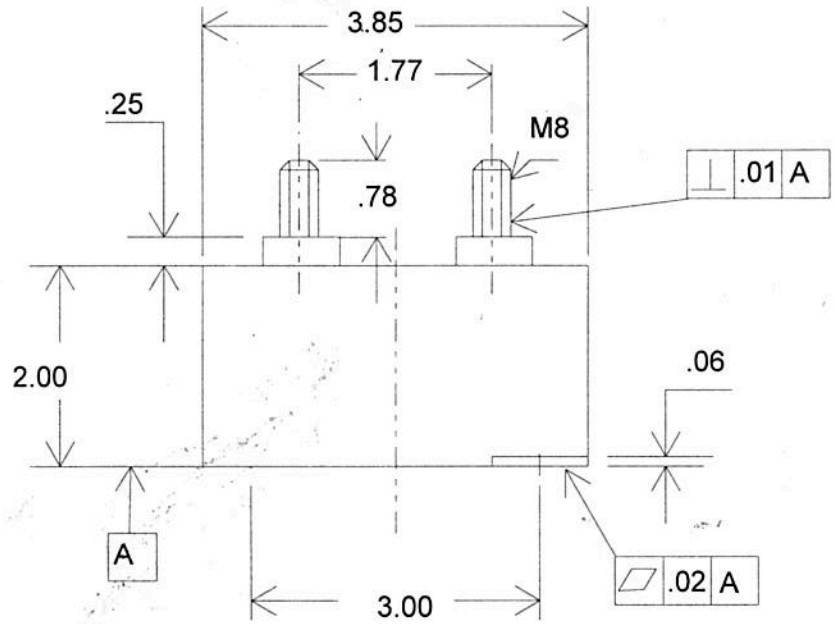

Tolerances, unless otherwise specified :
2 Place Decimals +/- .03
3 Place Decimals +/- .032
Angles: +/- 3

Terminal Hardware Material: Brass

	by	date		
A			part no.	2936
B			drawn	BN 7-2-97
C				
D				

capacitor INDUSTRIES